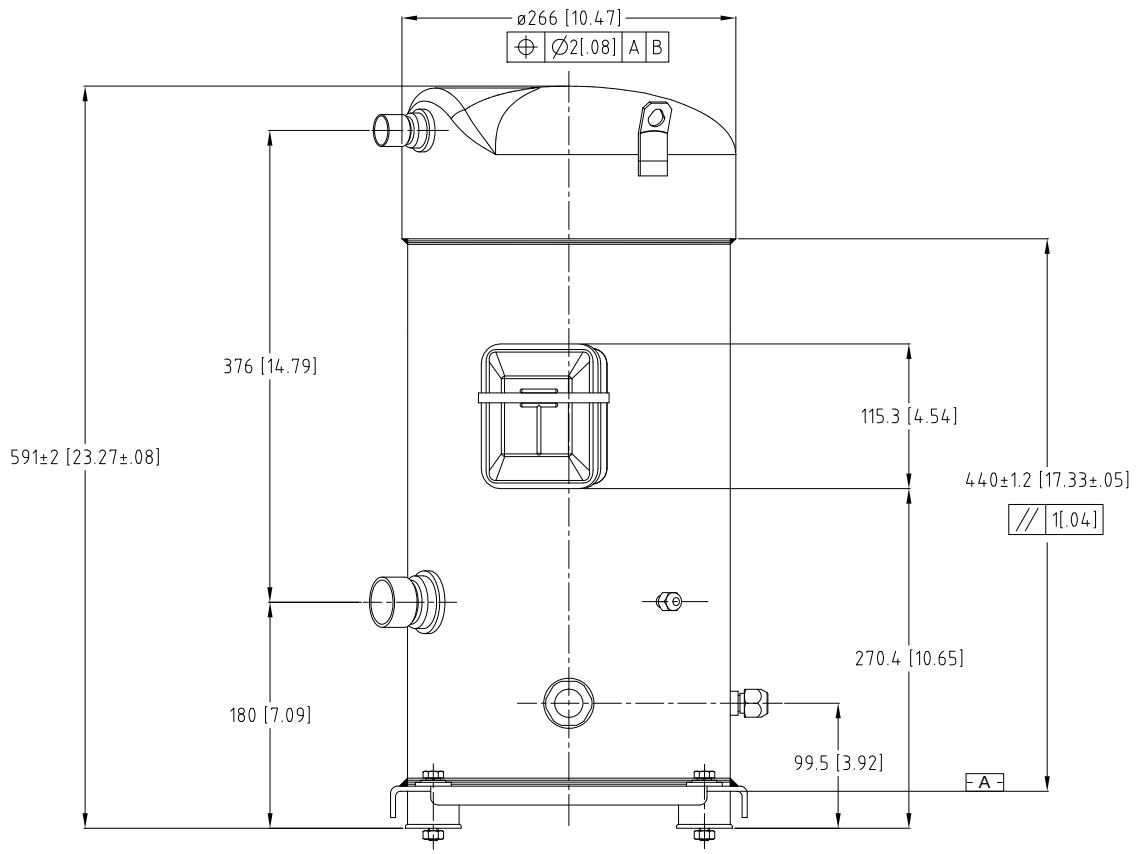

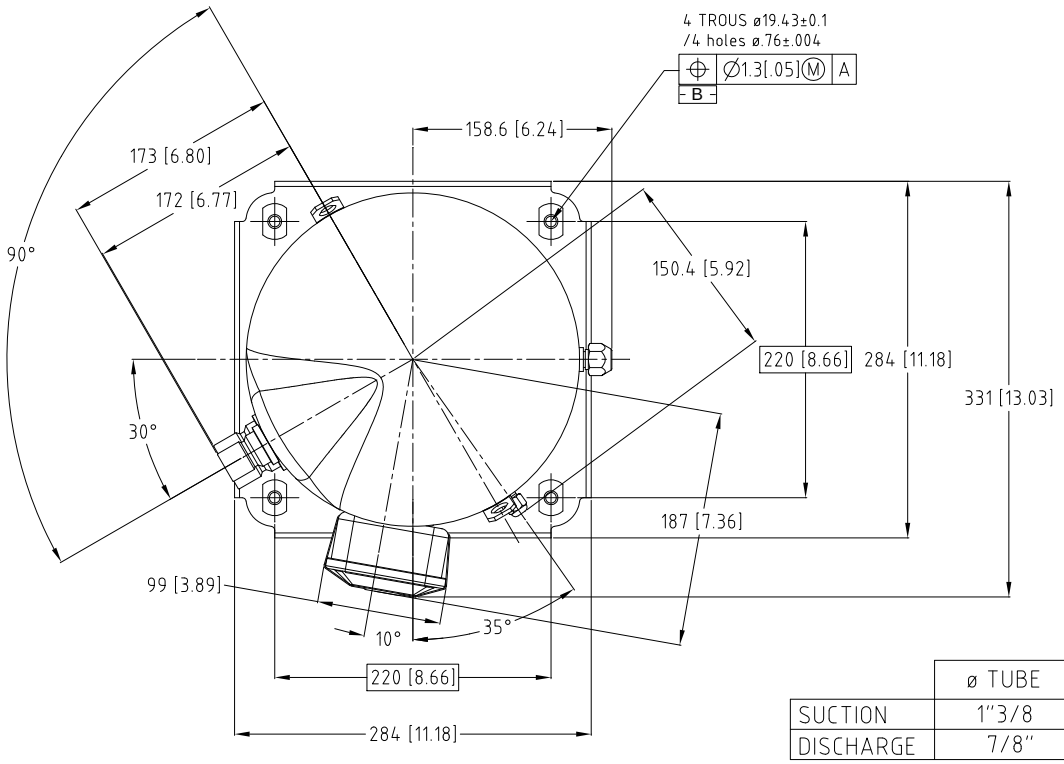

	ø TUBE
SUCTION	1"3/8
DISCHARGE	7/8"

B	X	JAP	19/11/02	DOM	DC 1020770
A	X	PEP	02/06/99	MAP	CREATION PLAN SERIE
IND	RT	PAR	DATE	APPROBATION	MODIFICATIONS

MATIERE:

Ech.: 1/4 | Tol.gén.: ± 0.8 [± .03] ± 2°

Danfoss Maneurop S.A.

Z.I. de REYRIEUX - B.P. 331F
01603 TREVOUX - FRANCE

B

ENCOMBREMENT S148/161-4V

B

S148/161-4V OUTLINE

Ce plan est la propriete de Danfoss Maneurop SA, toute copie ou communication a des tiers est interdite sans autorisation. This drawing is proprietary and shall not be copied or its contents disclosed to outside parties without the written consent of Danfoss Maneurop SA.

B

85 51 106